domix M3

PINOUT

Domotic Module for smart home & co

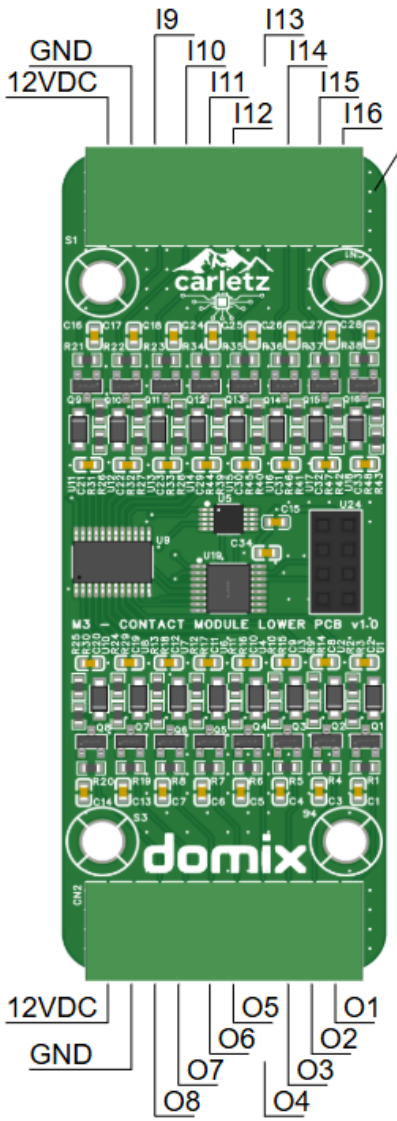

LOWER BOARD

VERTICAL BOARD

IDC CONNECTOR

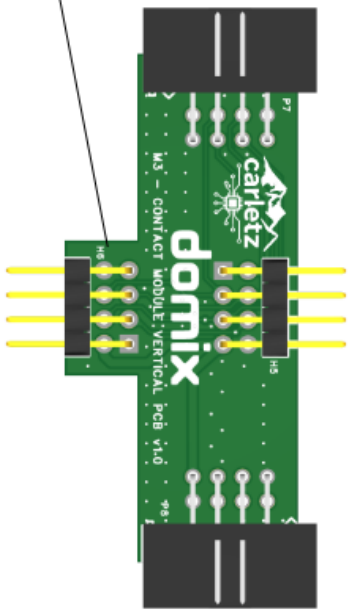

IDC CONNECTOR

UPPER BOARD

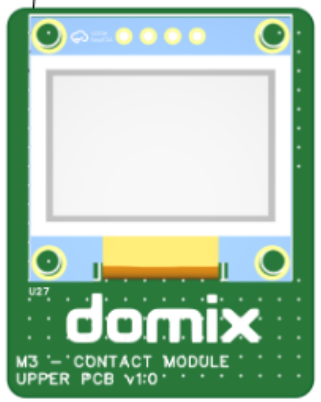

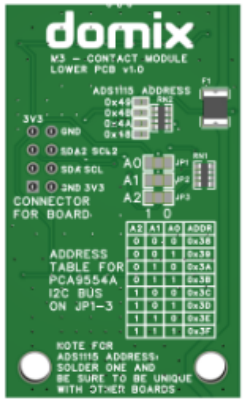

NOTE: DUE TO SPACE RESTRAINS THE ADDRESS SELECTOR FOR BOTH ADS1115 AND PCA9554A ARE ON PADS ON OPPOSITE SIDE

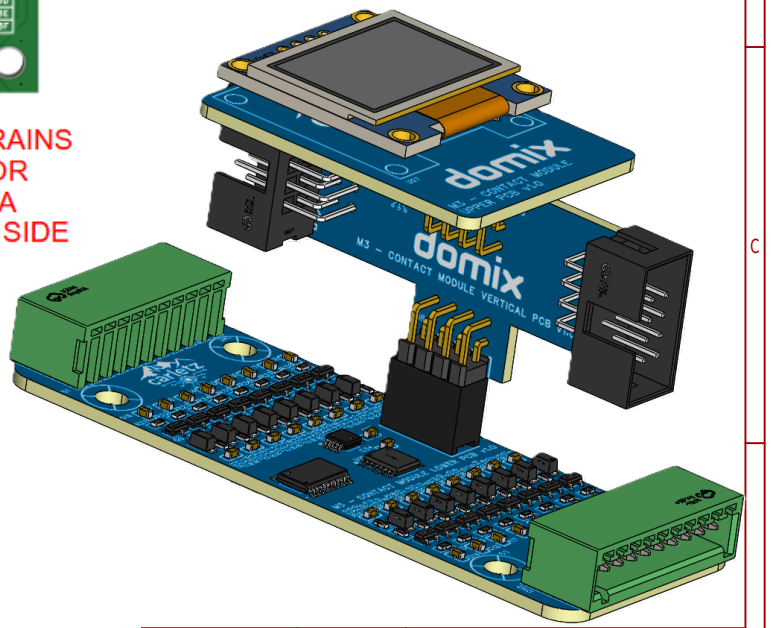

9	Drawn	carletz
5	Reviewed	carletz

carletz

Version	Size	Page 1 Total 3	Schematic	M3 - Contact Module		
1	A4	EasyEDA	Board	M3 - CONTACT	Page	Description

Analog Multiplexing and I2C

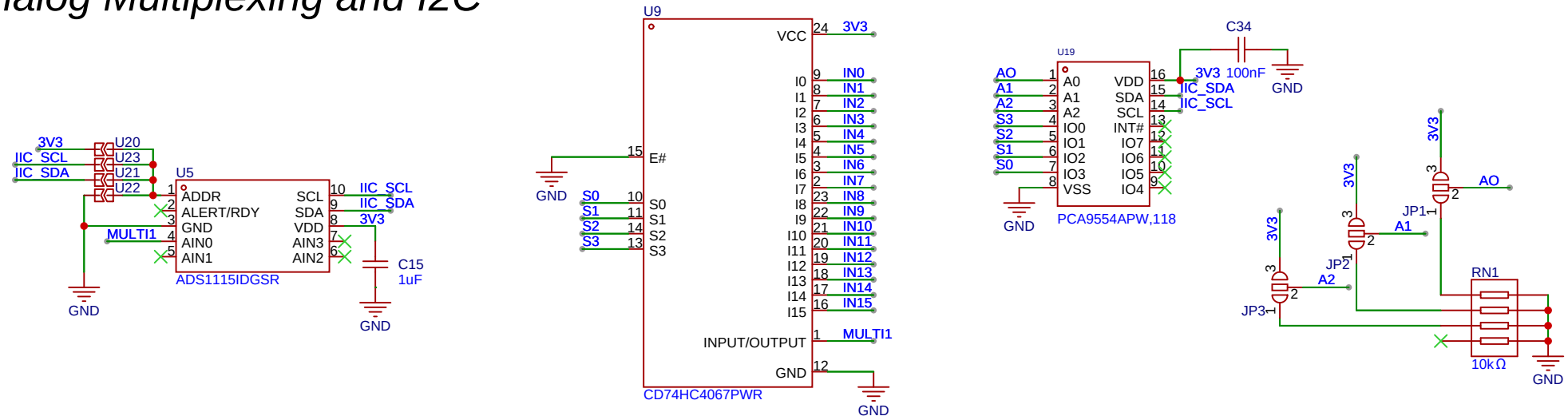

Connector & Miscellanea

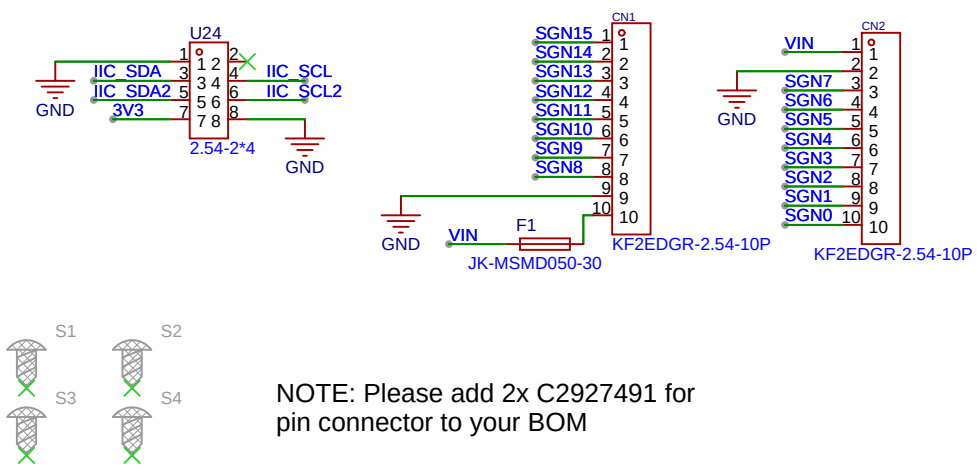

NOTE: Please add 2x C2927491 for pin connector to your BOM

carletz	DOMIX - Domotic module for smart home & co		Create at	2026-01-29	Drawn	carletz
			Update at	2026-03-22	Reviewed	carletz
	Version	Size	Page 2 Total 3	Schematic	M3 - Contact Module	
	1	A4	EasyEDA	Board	M3 - CONTACT	Page	Analog Mux & I2C

Contacts

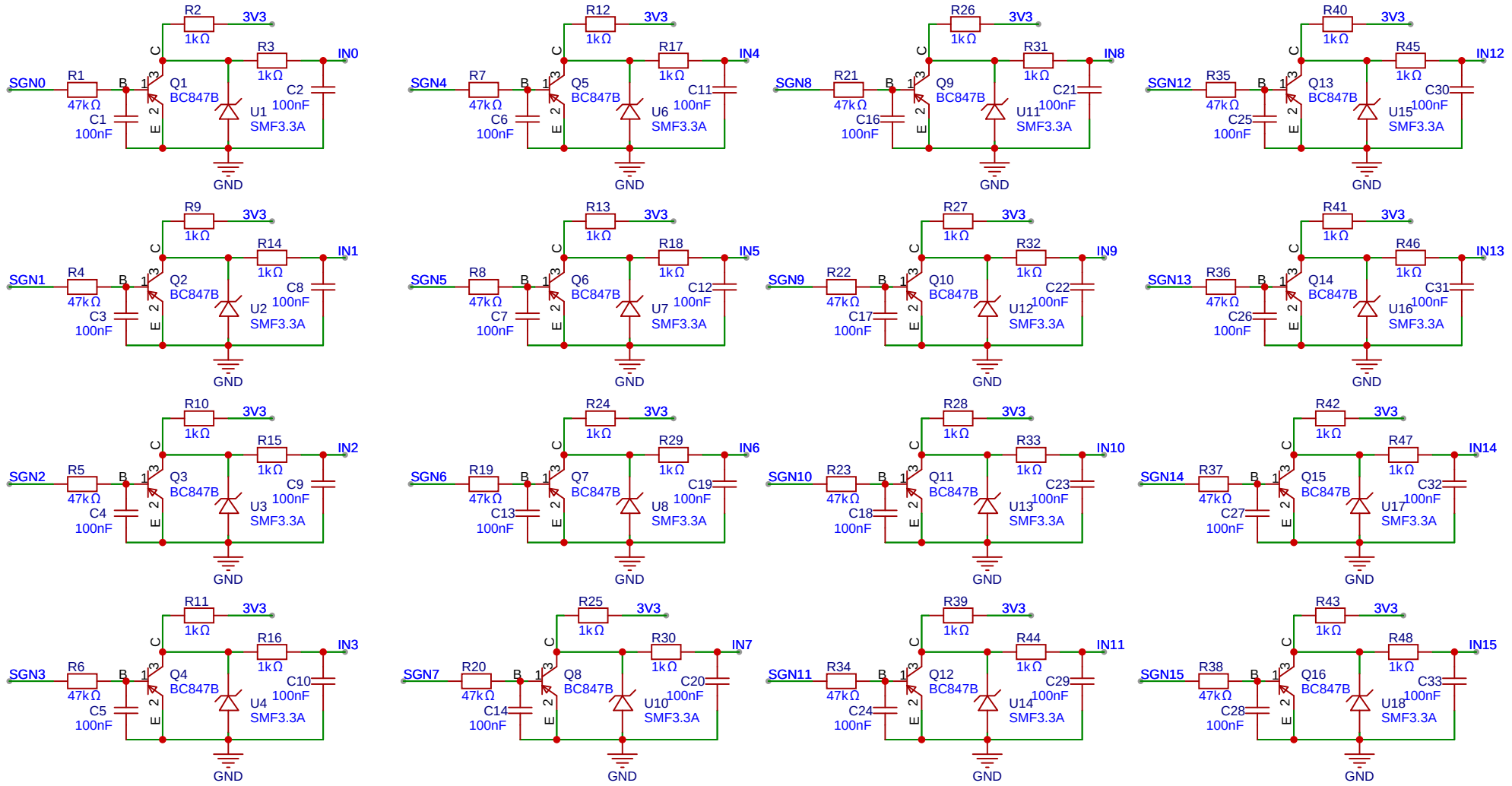

carletz	DOMIX - Domotic module for smart home & co		Create at	2026-01-29	Drawn: carletz
			Update at	2026-02-25	Reviewed: carletz
	Version	Size	Page 3 Total 3	Schematic	M3 - Contact Module
	1	A4	EasyEDA	Board: M3 - CONTACT	Page: Contact